Schematic	**Memory interface Schematic (8086)**	Update Date	2025-04-19
		Create Date	2025-04-05
Page	P1	Part Number	
Drawn	Group J		
Reviewed			

Abdalrahim Sawalha (211081)

Ahamd Zaqeeq (211043)

VER	SIZE	PAGE 1 OF 1
	A3	PPU
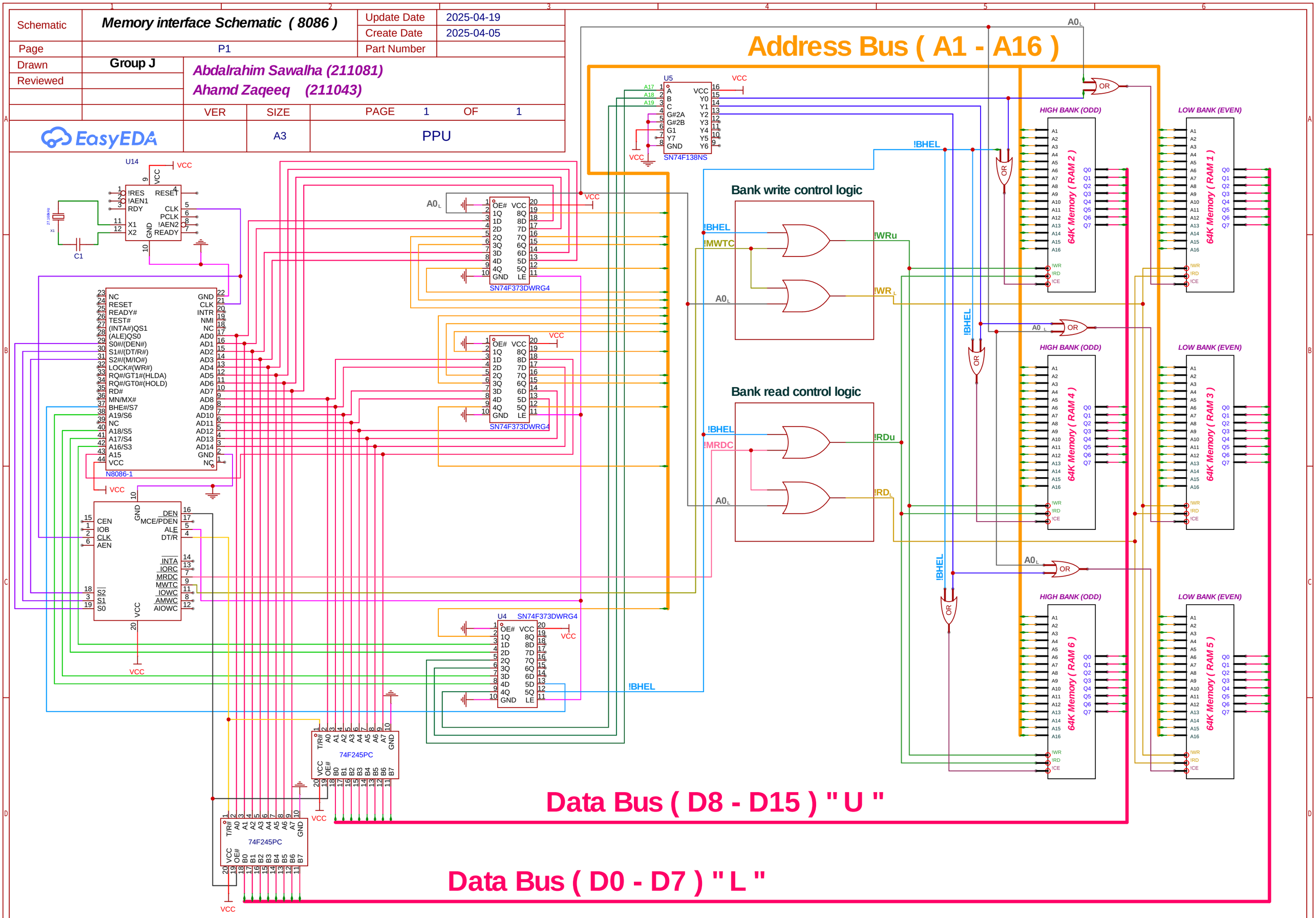
EasyEDA